HYUNDAI
POWER PRODUCTS

CORDLESS GRASS TRIMMER
HY20CGT

INSTRUCTION MANUAL

GENUINE PRODUCT OF
HYUNDAI CORPORATION

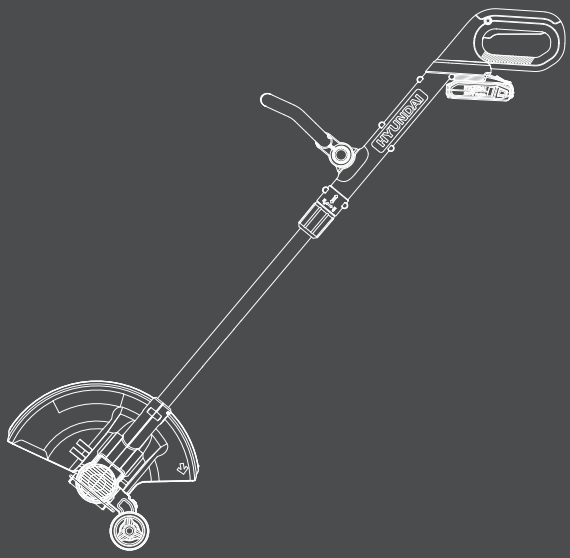

WARNING: READ THE INSTRUCTIONS CAREFULLY BEFORE USE.

ISS: NOV/24

Contents

Introduction....3
Safety Information....4
Unboxing....15
In The Box....16
Features....18
Assembly....20
Operation....27
Maintenance & Care....32
Technical Data....34
Recycling & Disposal....35
EU Declaration Of Conformity....37
Notes....38
Useful Information....39
Product Record....40
Contact Us....41

Introduction

Thank You For Purchasing Your HYUNDAI Product

We work very hard to give all of our customers the best possible service. If you have any problems, before leaving negative feedback, please contact us to give us a chance to resolve the issue. We would be delighted if you left us positive feedback! Thank you for purchasing this product.

⚠ Important!

WARNING: READ THE INSTRUCTION BOOKLET THOROUGHLY BEFORE USING THE MACHINE. Keep for future reference and pass it on if the machine is loaned or sold to another user.

This manual has been produced by Hyundai Power Products and should be kept with the product. Please read and understand these instructions before you use your product. Failure to do this may result in personal injury or damage to the product.

The safety precautions and warnings are to ensure your safety and protect you from harm or damage to the product.

The information contained in this manual was accurate at the time of production, however, HYUNDAI Power Products may make modifications to the product without notification.

Safety Information

⚠ General Power Tool Safety Warnings

WARNING: Read all safety warnings, instructions, illustrations and specifications provided with this power tool. *Failure to follow all instructions listed below may result in electric shock, fire and/or serious injury.*

Save all warnings and instructions for future reference.

The term "power tool" in the warnings refers to your mains-operated (corded) power tool or battery-operated (cordless) power tool.

⚠ Work Area Safety

a) Keep work area clean and well lit. *Cluttered or dark areas invite accidents.*

b) Do not operate power tools in explosive atmospheres, such as in the presence of flammable liquids, gases or dust. *Power tools create sparks which may ignite the dust or fumes.*

c) Keep children and bystanders away while operating a power tool. *Distractions can cause you to lose control.*

⚠ Electrical Safety (Using the Charger)

a) Power tool plugs must match the outlet. Never modify the plug in any way. Do not use any adapter plugs with earthed (grounded) power tools. *Unmodified plugs and matching outlets will reduce risk of electric shock.*

b) Avoid body contact with earthed or grounded surfaces, such as pipes, radiators, ranges and refrigerators. *There is an increased risk of electric shock if your body is earthed or grounded.*

c) Do not expose power tools to rain or wet conditions. *Water entering a power tool will increase the risk of electric shock.*

d) Do not abuse the cord. Never use the cord for carrying, pulling or unplugging the power tool. Keep cord away from heat, oil, sharp edges or moving parts. *Damaged or entangled cords increase the risk of electric shock.*

e) When operating a power tool outdoors, use an extension cord suitable for outdoor use. *Use of a cord suitable for outdoor use reduces the risk of electric shock.*

f) If operating a power tool in a damp location is unavoidable, use a residual current device (RCD) protected supply. *Use of an RCD reduces the risk of electric shock.*

Safety Information

⚠ Personal Safety

a) Stay alert, watch what you are doing and use common sense when operating a power tool. Do not use a power tool if you are tired or under the influence of drugs, alcohol or medication. *A moment of inattention while operating power tools may result in serious personal injury.*
b) Use personal protective equipment. Always wear eye protection. *Protective equipment such as a dust mask, non-skid safety shoes, hard hat, or hearing protection used for appropriate conditions will reduce personal injuries.*
c) Prevent unintentional starting. Ensure the switch is in the off-position before connecting to power source and/or battery pack, picking up or carrying the tool. *Carrying power tools with your finger on the switch or energising power tools that have the switch on invites accidents.*
d) Remove any adjusting key or wrench before turning the power tool on. *A wrench or a key left attached to a rotating part of the power tool may result in personal injury.*
e) Do not overreach. Keep proper footing and balance at all times. *This enables better control of the power tool in unexpected situations.*
f) Dress properly. Do not wear loose clothing or jewellery. Keep your hair and clothing away from moving parts. *Loose clothes, jewellery or long hair can be caught in moving parts.*
g) If devices are provided for the connection of dust extraction and collection facilities, ensure these are connected and properly used. *Use of dust collection can reduce dust-related hazards.*
h) Do not let familiarity gained from frequent use of tools allow you to become complacent and ignore tool safety principles. *A careless action can cause severe injury within a fraction of a second.*

⚠ Power Tool Use and Care

a) Do not force the power tool. Use the correct power tool for your application. *The correct power tool will be more efficient and safer at the rate for which it was designed.*
b) Do not use the power tool if the switch does not turn it on and off. *Any power tool that cannot be controlled with the switch is dangerous and must be repaired.*
c) Disconnect the plug from the power source and/or remove the battery pack, if detachable, from the power tool before making any adjustments, changing accessories, or storing power tools. *Such preventive safety measures reduce the risk of starting the power tool accidentally.*

d) Store idle power tools out of the reach of children and do not allow persons unfamiliar with the power tool or these instructions to operate the power tool. *Power tools are dangerous in the hands of untrained users.*
e) Maintain power tools and accessories. Check for misalignment or binding of moving parts, breakage of parts and any other condition that may affect the power tool's operation. If damaged, have the power tool repaired before use. *Many accidents are caused by poorly maintained power tools.*
f) Keep cutting tools sharp and clean. *Properly maintained cutting tools with sharp cutting edges are less likely to bind and are easier to control.*
g) Use the power tool, accessories and tool bits etc. in accordance with these instructions, taking into account the working conditions and the work to be performed. *Use of the power tool for operations different from those intended could result in a hazardous situation.*
h) Keep handles and grasping surfaces dry, clean and free from oil and grease. *Slippery handles and grasping surfaces do not allow for safe handling and control of the tool in unexpected situations.*

⚠ Battery Tool Use and Care

a) Recharge only with the charger specified by the manufacturer. *A charger that is suitable for one type of battery pack may create a risk of fire when used with another battery pack.*
b) Use power tools only with specifically designated battery packs. *Use of any other battery packs may create a risk of injury and fire.*
c) When battery pack is not in use, keep it away from other metal objects, like paper clips, coins, keys, nails, screws or other small metal objects, that can make a connection from one terminal to another. *Shorting the battery terminals together may cause burns or a fire.*
d) Under abusive conditions, liquid may be ejected from the battery; avoid contact. If contact accidentally occurs, flush with water. If liquid contacts eyes, additionally seek medical help. *Liquid ejected from the battery may cause irritation or burns.*
e) Do not use a battery pack or tool that is damaged or modified. *Damaged or modified batteries may exhibit unpredictable behaviour resulting in fire, explosion or risk of injury.*
f) Do not expose a battery pack or tool to fire or excessive temperature. *Exposure to fire or temperature above 130 °C may cause explosion.*
g) Follow all charging instructions and do not charge the battery pack or tool outside the temperature range specified in the instructions. *Charging*

improperly or at temperatures outside the specified range may damage the battery and increase the risk of fire.

⚠ Service

a) Make sure your power tool serviced by a qualified repair person using only identical replacement parts. *This will ensure that the safety of the power tool is maintained.*
b) Never service damaged battery packs. *Service of battery packs should only be performed by the manufacturer or authorised service providers.*

⚠ Lawn Trimmer and Lawn Edge Trimmer Safety Warnings

a) Do not use the machine in bad weather conditions, especially when there is a risk of lightning. *This decreases the risk of being struck by lightning.*
b) Thoroughly inspect the area for wildlife where the machine is to be used. *Wildlife may be injured by the machine during operation.*
c) Thoroughly inspect the area where the machine is to be used and remove all stones, sticks, wires, bones, and other foreign objects. *Thrown objects can cause personal injury.*
d) Before using the machine, always visually inspect to see that the cutter and the cutter assembly are not damaged. *Damaged parts increase the risk of injury.*
e) Keep guards in place. Guards must be in working order and be properly mounted. *A guard that is loose, damaged, or is not functioning correctly may result in personal injury.*
f) Keep all cooling air inlets clear of debris. *Blocked air inlets and debris may result in overheating or risk of fire.*
g) Wear eye protection and ear protection. *Adequate protective equipment will reduce the risk of personal injury.*
h) While operating the machine, always wear non-slip and protective footwear. Do not operate the machine when barefoot or wearing open sandals. *This reduces the chance of injury to the feet from contact with the moving cutter.*
i) Always wear clothing such as trousers that covers the operator's legs while operating the machine. *Contact with the moving cutter or line may cause injury.*
j) Keep bystanders away while operating the machine. *Thrown debris*

can result in serious personal injury.

k) Do not operate the machine above waist height. *This helps prevent unintended cutter contact and enables better control of the machine in unexpected situations.*

l) Exercise caution when operating the machine in wet grass. Walk, never run. *This reduces the risk of slipping and falling which may result in personal injury.*

m) Do not operate the machine on excessively steep slopes. *This reduces the risk of loss of control, slipping and falling which may result in personal injury.*

n) When working on slopes, always be sure of your footing, always work across the face of slopes, never up or down and exercise extreme caution when changing direction. *This reduces the risk of loss of control, slipping and falling which may result in personal injury.*

o) Keep all power cords and cables away from cutting area. *Power cords or cables may be hidden in hedges or bushes and can be accidentally cut or damaged by the line or cutter.*

p) Keep all parts of the body away from the moving trimmer cutter or line. Do not clear material from the machine until it has been disconnected from the power source. *The moving trimmer cutter or line may result in serious personal injury.*

q) Carry the machine with the machine switched off and away from your body. *Proper handling of the machine will reduce the likelihood of accidental contact with a moving trimmer cutter or line.*

r) Only use replacement cutting heads and trimmer cutters or lines specified by the manufacturer. Do not replace the trimmer cutters or lines with metal wires or blades. *Incorrect replacement parts may cause loss of control, breakage and injury.*

⚠ Safety Warnings for Lithium Battery Pack

WARNING: DO NOT use these batteries if they become damaged, swollen or hot during charging or use.

a) Do not dismantle, open or shred cells or battery pack.

b) Do not short-circuit a battery pack. Do not store battery packs haphazardly in a box or drawer where they may short-circuit each other or be short-circuited by conductive materials. *When battery pack is not in use, keep it away from other metal objects, like paper clips, coins, keys, nails, screws or other small metal objects, that can make a connection from one terminal to another. Shorting the battery terminals together*

may cause burns or a fire.

c) Do not expose battery pack to heat or fire. Avoid storage in direct sunlight.

d) Do not subject battery pack to mechanical shock.

e) In the event of battery leaking, do not allow the liquid to come into contact with the skin or eyes. If contact has been made, wash the affected area with copious amounts of water and seek medical advice.

f) Keep battery pack clean and dry.

h) Wipe the battery pack terminals with a clean dry cloth if they become dirty.

g) Battery pack needs to be charged before use. Always refer to this instruction and use the correct charging procedure.

h) Do not keep the battery pack on charge when not in use.

i) After extended periods of storage, it may be necessary to charge and discharge the battery pack several times to obtain maximum performance.

j) Recharge only with the charger specified by Hyundai. Do not use any charger other than that specifically provided for use with the equipment.

k) Do not use any battery pack which is not designed for use with the equipment.

l) Keep battery pack out of the reach of children.

m) Retain the original product literature for future reference.

n) Remove the battery from the equipment and keep in a safe place when not in use.

o) Dispose of properly.

p) Do not mix cells of different manufacturer, capacity, size or type within a device.

q) Keep the battery away from microwaves and high pressure.

r) Warning! Only use the batteries supplied.

⚠ SAFETY WARNINGS FOR CHARGER

⚠**WARNING! Read all safety warnings and all instructions.** *Failure to follow all instructions listed below may result in electric shock, fire and/or serious injury.*

Save all warnings and instructions for future reference.

WARNING! Never allow children or people unfamiliar with these instructions to use the product. Local regulations can restrict the minimum age of the operator.

Safety Information

Keep children, pets, and other people not using the unit a sensible distance away from the work area. Be alert and shut off the unit if anyone enters work area. Keep children under the watchful care of a responsible adult.
If the supply cord is damaged, It must be replaced by the manufacturer, its service agent or similarly qualified persons in order to avoid a hazard.
Please adhere to the following:
a) Before charging, read the instructions.
b) Do not charge a leaking battery.
c) Do not use chargers for works other than those for which they are designed.
d) Before charging, ensure your charger is matching the local AC supply.
e) For indoor use, or do not expose to rain.
f) The charging device must be protected from moisture.
g) Do not use the charging device outdoors.
h) Do not short out the contacts of battery or charger.
i) Respect the polarity "+/-" when charging.
j) Do not open the unit and keep it out of the reach of children.
k) Do not charge the batteries of other manufacturers or ill-suited models
l) Ensure that the connection between the battery charger and battery is correctly positioned and is not obstructed by foreign bodies.
m) Keep battery charger's slots free of foreign objects and protect against dirt and humidity. Store in a dry and frost-free place.
n) When charging batteries, ensure that the battery charger is in a well-ventilated area and away from inflammable materials. Batteries can get hot during charging. Do not overcharge any batteries. Ensure that batteries and chargers are not left unsupervised during charging.
o) Do not recharge non-rechargeable batteries, as they can overheat and break.
p) Longer life and better performance can be obtained if the battery pack is charged when the air temperature is between 18°C and 24°C. Do not charge the battery pack in air temperatures below 0°C, or above 40°C. This is important as it can prevent serious damage to the battery pack.
q)Charge only battery pack of the same model provided by manufacturer and of models recommended by manufacturer.

⚠ Noise & Vibrations (Where Applicable)

The declared vibration total value may be used for comparing one

tool with another, and may also be used in a preliminary assessment of exposure.

⚠**WARNING:** The vibration emission value during actual use of the power tool can differ from the declared value depending on the ways in which the tool is used. Please consider the following examples and other variations on how the tool is used:

How the tool is used and the materials being cut or drilled.

The tool being in good condition and well maintained

Using the correct accessory for the tool and ensuring it is sharp and in good condition.

The tightness of the grip on the handles and if any anti vibration accessories are used.

The tool is being used as intended by its design and by following the correct procedures outlined in this instruction manual.

This tool may cause hand-arm vibration syndrome if its use is not used as prescribed in this instruction manual.

⚠**WARNING:** To be accurate, an estimation of exposure level in the actual conditions of use should also take account of all parts of the operating cycle such as the times when the tool is switched off and when it is running idle but not actually doing the job. This may significantly reduce the exposure level over the total working period.

Helping to minimise your vibration exposure risk.

ALWAYS use sharp chisels, drills and blades.

Maintain this tool in accordance with these instructions and keep well lubricated (where appropriate).

If the tool is to be used regularly then invest in anti vibration accessories.

Plan your work schedule to spread any high vibration tool use across a number of days.

⚠ Residual Risks

Even when tool is used as prescribed it is not possible to eliminate all residual risk factors. The following hazards may arise in connection with the tool's construction and design:

1. Damage to lungs if an effective dust mask is not worn.
2. Damage to hearing if effective hearing protection is not worn.

Health defects resulting from vibration emission if the power tool is being used over longer period of time or not adequately managed and properly maintained.

Safety Information

⚠**WARNING:** This machine produces an electromagnetic field during operation. This field may under some circumstances interfere with active or passive medical implants. To reduce the risk of serious or fatal injury, we recommend persons with medical implants to consult their physician and the medical implant manufacturer before operating this machine.

⚠ Intended Use

The HY20CGT is an battery powered grass trimmer from HYUNDAI.

This machine is a garden tool. The machine is manufactured according to the latest safety requirements. Every precaution is only effective when it is followed exactly.

Intended Use
The machine is intended for the cutting of grass and weeds under bushes, as well as on slopes and edges that can not be reached with the lawn mower.

User Types
This product is for personal domestic DIY use only.
It is not suitable for commercial, industrial, or trade use.

Safety Information

⚠ Symbol

Appropriate Personal Protective Equipment (PPE), MUST be worn at all times when operating or repairing the machine. No protective equipment can ensure 100% protection.
When selecting PPE, make sure it's CE marked and it suits the user in terms of size, fit, etc. If more than one item of PPE is worn at the same time, make sure they can be used together, e.g. wearing safety glasses may disturb the seal of a respirator, causing air leaks.

Read the operating instructions and store them in a safe place.

Warning

Wear eye protection

Wear ear protection

Do not expose to moisture.

WARNING – Keep bystanders away

Do not use metal blades

WARNING – Disconnect battery before maintenance

Do not burn

Safety Information

Batteries may enter water cycle if disposed improperly, which can be hazardous for ecosystem. Do not dispose of waste batteries as unsorted municipal waste.

Li-Ion

Li-Ion battery This product has been marked with a symbol relating to 'separate collection' for all battery packs and battery pack. It will then be recycled or dismantled in order to reduce the impact on the environment. Battery packs can be hazardous for the environment and for human health since they contain hazardous substances.

Read operator's manual

For indoor use only

Positive terminal

Negative terminal

Double insulation

T 2A

Fuse

Waste electrical products must not be disposed of with household waste. Please recycle where facilities exist. Check with your local authorities or retailer for recycling advice.

Unboxing

⚠**WARNING:** Unboxing and assembling the machine should be done on a flat, surface with enough room. Disposal of the packaging should be done in accordance with the local regulations in force.

⚠**WARNING:** Some of the packaging material may be harmful to children. Keep out of reach of children.

1. Carefully remove the product from the packaging and examine it for any sign of damage caused during shipping.
2. Lay the contents out and check them. If any part is damaged or missing, you must not use the machine. Contact HYUNDAI POWER PRODUCTS immediately.
3. You must keep the packaging material in case the machine needs to be returned or repaired.
4. Ensure that you have all the accessories and tools you need for assembly and operation including the suitable personal protective equipment.

In The Box

*Not To Scale

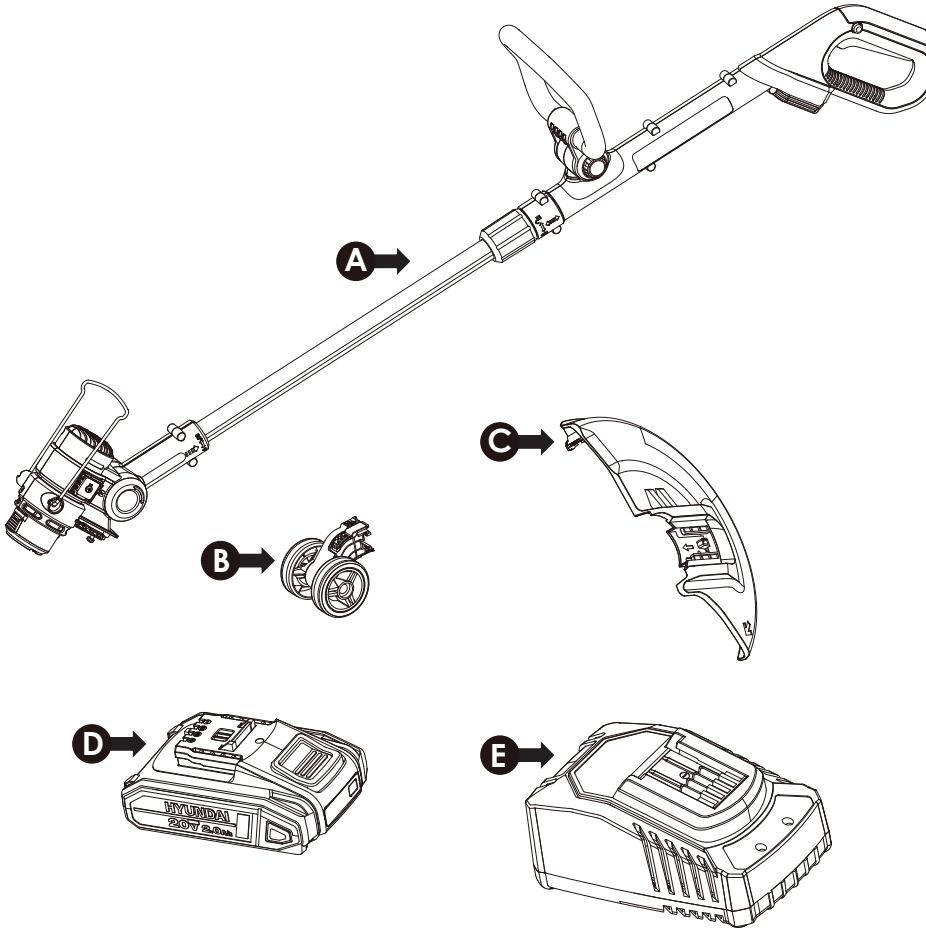

Descriptions on next page

In The Box

- **A** Grass trimmer assembly
- **B** Edger wheel
- **C** Safety guard
- **D** Battery pack
- **E** Charger

Features

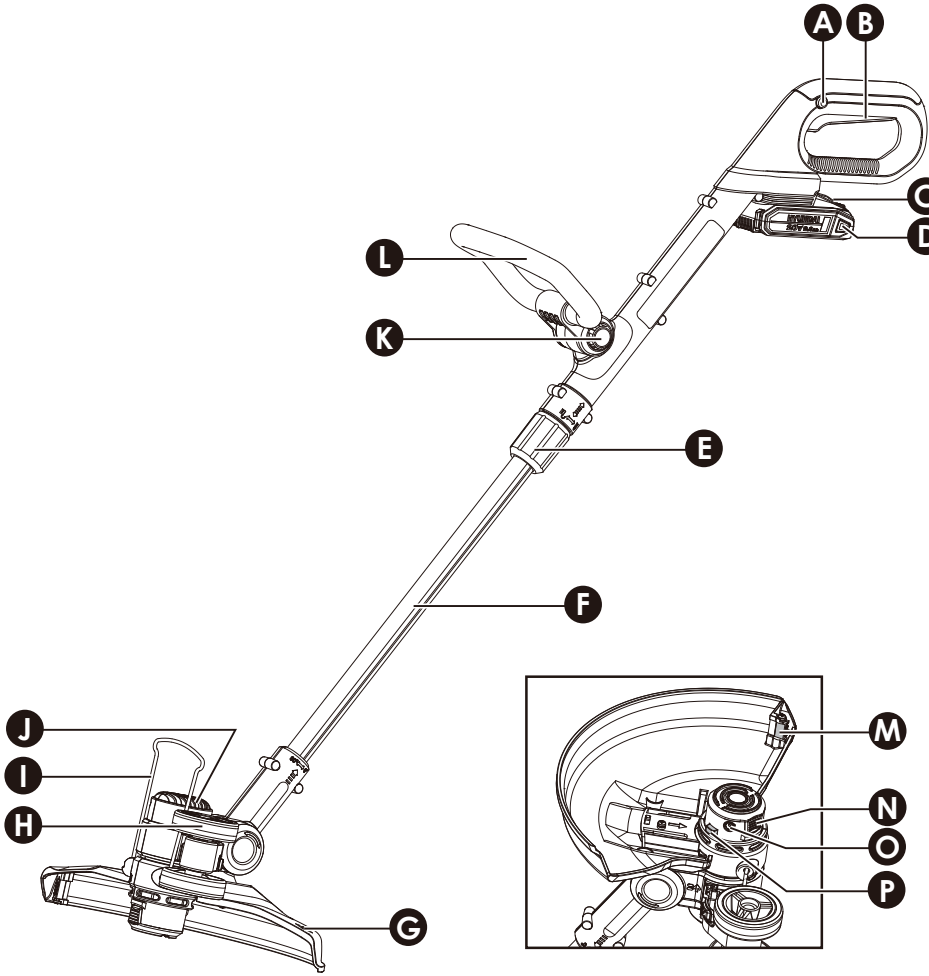

Features

- **A** Lock-off button
- **B** On/off switch
- **C** Battery pack release button
- **D** Battery pack
- **E** Height adjustment locking collar
- **F** Telescope tube
- **G** Safety guard
- **H** Edger wheel
- **I** Lower guard
- **J** Trimmer head
- **K** Auxiliary handle locking knob
- **L** Auxiliary handle
- **M** Line cutter
- **N** Spool cap release latch
- **O** Eyelet
- **P** Line feed button

Assembly

Assembly Overview

There are 10 steps to the assembly:

STEP 1. Fitting the Safety Guard
STEP 2. Removing the Blade Protection Label
STEP 3. Fitting or Removing the Edging Wheel
STEP 4. Adjusting the Auxiliary Handle
STEP 5. Adjusting the Height
STEP 6. Adjusting the Operating Angle
STEP 7. Adjusting the Cutting Angle
STEP 8. Adjusting the Lower Guard
STEP 9. Battery Charging
STEP 10. Removing/Installing the Battery Pack

STEP 1 : Fitting the Safety Guard

1. Remove the mounting screw from safety guard. Attach the safety guard **(G)** to the trimmer head. Align the guard so it slides into the slots located on the trimmer head.
2. Secure the safety guard **(G)** onto the trimmer head with the screw **(a)** provided.

⚠WARNING: The guard must always be on the tool to protect the user.

⚠WARNING: Never operate the tool without the guard properly in place. Use of the unit without the guard fitted will cause the motor to overheat, and void the warranty.

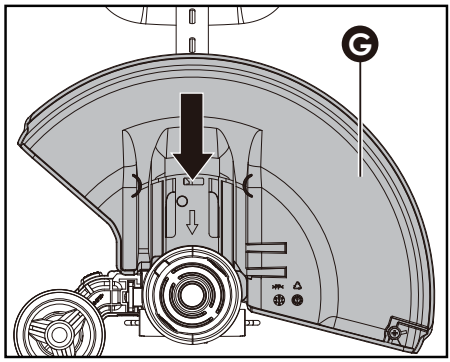

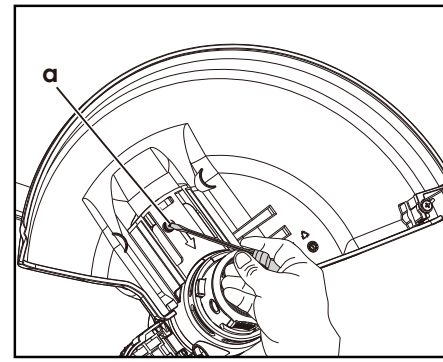

STEP 2 : Removing the Line Cutter Protection Label

1. The line cutter **(M)** is covered with a protection label. Please remove

the label before operation.

⚠WARNING: Be careful when doing this as the guard has a very sharp line cutter.

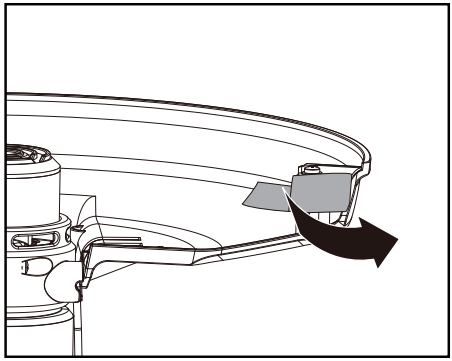

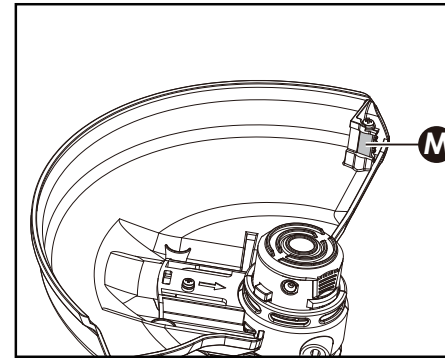

STEP 3 : Fitting or Removing the Edging Wheel

1. With the tool upside-down, slide the edging wheel **(H)** onto the metal plate located on the side of the trimmer head **(J)**. Make sure the grooves of the edging wheel **(H)** lock onto the metal plate. You will hear it click into place.
2. To remove the wheel **(H)**, press the release button **(b)** on the wheel **(H)** and pull the wheel **(H)** out from the trimmer head **(J)**.

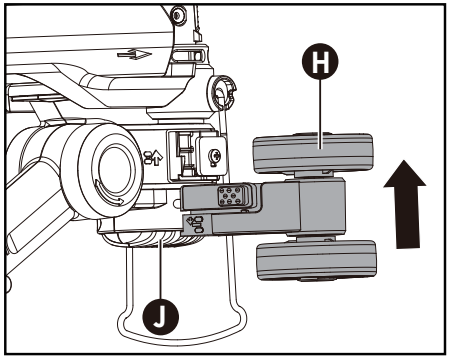

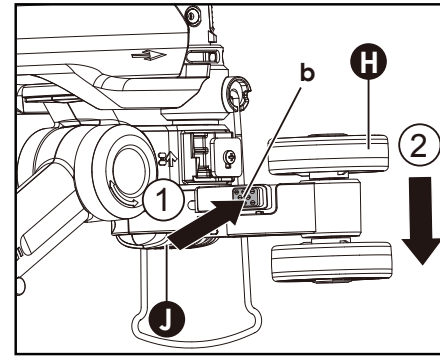

STEP 4 : Adjusting the Auxiliary Handle

Press the auxiliary handle locking knob **(K)**. Rotate the auxiliary handle **(L)** to the most comfortable and balanced position. Then release the auxiliary handle locking knob **(K)**.

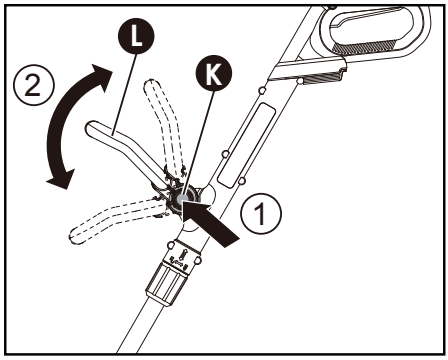

STEP 5 : Adjusting the Height

1. Unscrew the height adjustment locking collar **(E)** in the direction indicated to unlock, turn it clockwise.
2. Adjust the length of the telescope tube **(F)** to the most comfortable length.
3. Tighten the locking collar **(E)** in the direction indicated to lock, turn it anti-clockwise.

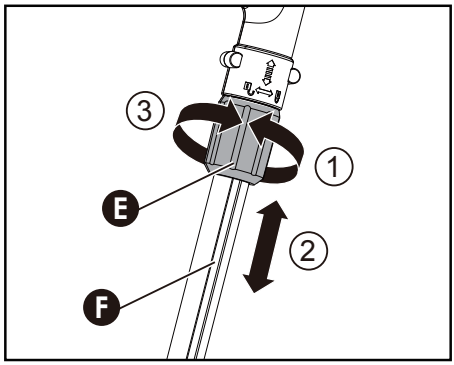

STEP 6 : Adjusting the Operating Angle

1. Gently place your foot on the trimmer head **(J)** or the safety guard **(G)**.
2. Pull the telescope tube **(F)** upwards and rotate it in 0-90°.

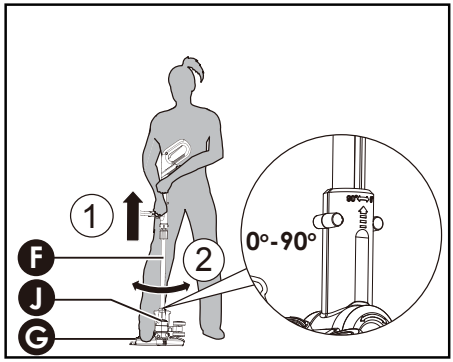

STEP 7 : Adjusting the Cutting Angle

1. To adjust the main handle angle downwards or switch the tool from trimming mode to edging mode, gently place one foot on the motor housing portion of the trimmer head **(J)**, then grip the main handle and apply adequate force on the main handle by pushing it downwards.
2. Adjust the main handle angle upwards, gently placeone foot on the safety guard **(G)**, then grip the main handle, apply adequate force to adjust.

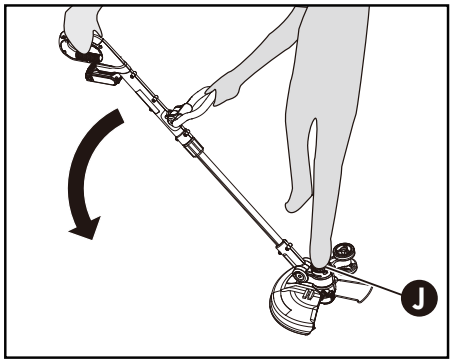

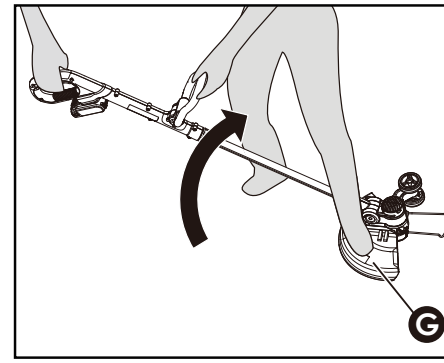

STEP 8 : Adjusting the Lower Guard

Lift the lower guard **(I)** up when edging and put it down before trimming. Before trimming or edging make sure the lower guard is locked firmly in position.

Assembly

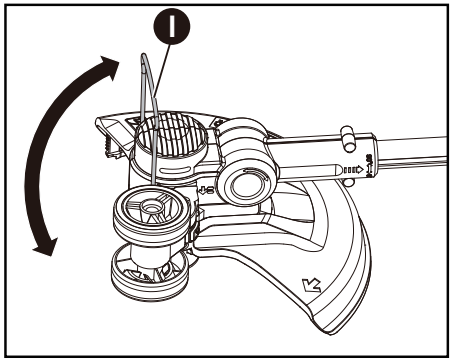

STEP 9 : Battery Charging

1. Charge the battery pack

Use only the charger specifically provided for use with this equipment.
If the battery pack becomes very hot you must remove your battery pack from the charger and allow time for the battery to cool down before recharging.
Fully charge the battery before storing it. For prolonged storage, recharge the battery every three months to maintain its performance

2. To remove or install the battery pack

1. To remove the battery pack, firmly press the release button **(C)** and then slide the battery pack **(D)** out from your tool.
2. After recharging, slide the battery pack back into tool's battery port. A simple push with light pressure will be sufficient to secure it into place.

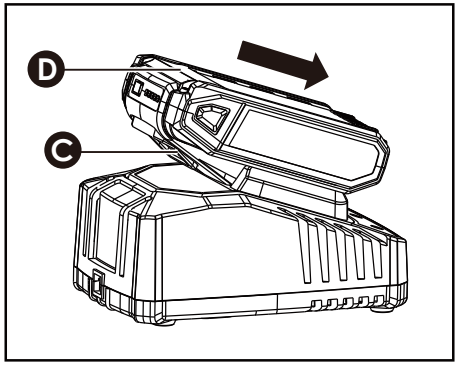

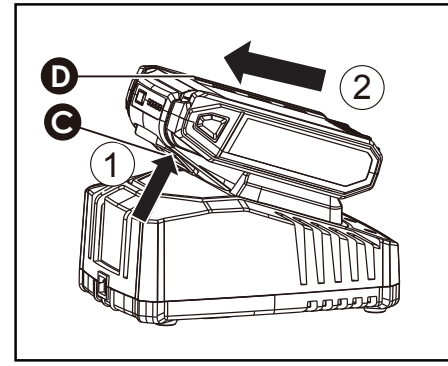

3. Charging procedure

1) Plug the charger into the correct power supply. The green light will illuminate.

2) Slide the battery pack into the charger, ensuring it is securely positioned in the correct charging orientation. The green light will turn off, and the red light will illuminate to indicate that charging has begun.

3) Once charging is complete, the red light will turn off, and the green light will illuminate.

4) After the battery is fully charged, unplug the charger and remove the battery pack.

NOTE: If the battery pack is locked in the charger, press the battery pack release button to release and remove it.

⚠WARNING: If the battery charge is depleted after continuous use or exposure to direct sunlight or heat, allow the tool to cool down before recharging to ensure a full charge is achieved.

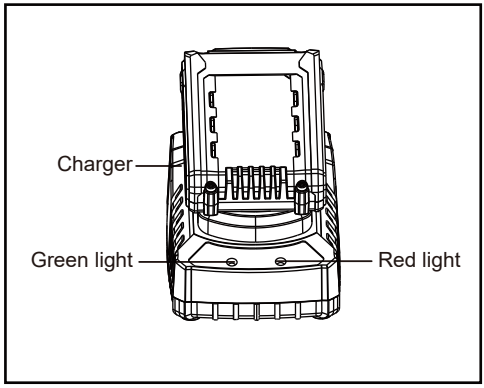

4. Charging indicator

This charger is equipped to detect potential issues with battery packs. Indicator lights signal any problems (refer to the table below). If a problem arises, insert a new battery pack to verify if the charger is functioning properly.

- If the new battery charges correctly, the original battery pack is defective and should be returned to a service centre or recycling facility.
- If the new battery pack exhibits the same issue as the original, have the charger inspected and tested at an authorised service centre.

Light	ON/OFF flash	Status
Red on ●	———	Charging

Red flash	- - - - -	Defective battery
Green on	———	Fully charged
Green flash	- - - - -	Battery too hot/cold

5. Checking the power condition of battery pack

The battery level can be known from the battery indicator light by pressing the button **(c)** beside the lights.

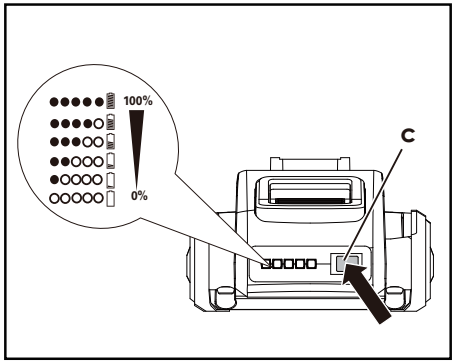

STEP 10 : Removing or Installing the Battery Pack into the Tool

1. Press the battery pack release button **(C)** and slide the battery pack **(D)** out of the tool.
2. Slide the fully charged battery pack **(D)** onto the tool with sufficient force until it clicks into position.

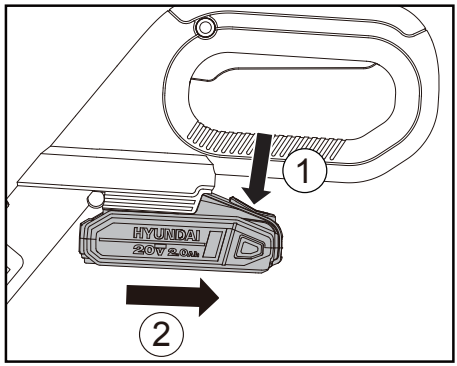

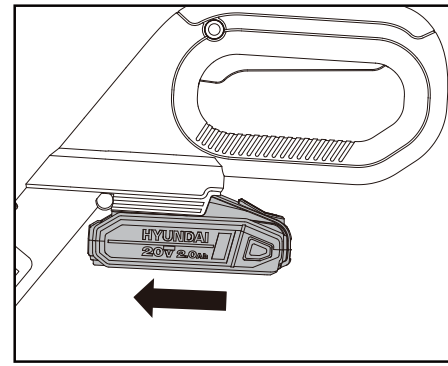

Operation

Safety On/Off Switch

1. The safety switch is locked to prevent accidental starting. Press the lock-off button **(A)** before activating the on/off switch **(B)**. You can then release the lock-off button **(A)** and the trimmer will run.
2. To switch off, just release the on/off switch **(B)**.

⚠WARNING: The cutting head continues to rotate after the trimmer has been switched off; wait until it has completely stopped then lay down the tool.

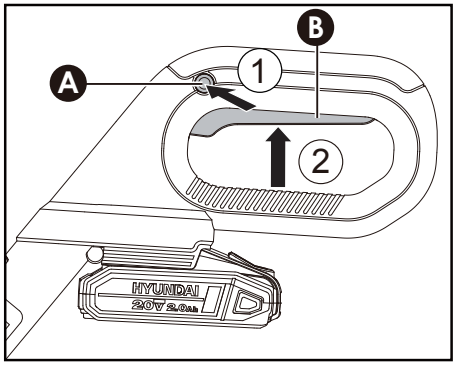

Operating

⚠WARNING: Always wear eye protection. Never lean over the trimmer head. Rocks or debris can ricochet or be thrown into your eyes and facial area, which can cause blindness and/or other serious injury.

⚠WARNING: Wear eye protection and suitable clothing. Hold front handle with one hand and auxiliary handle with the other hand. Keep unit below waist level. Work only from your right to your left to ensure debris is thrown away from you. Without bending over, keep line near and parallel to the ground (perpendicular when edging) and not fully submersed into the material being cut.

⚠WARNING: Make sure that line is fed out before operation. Make sure motor is up to full speed before trimming.

1. Trimming

1) Keep the trimmer head at an angle of about 30° to the ground when trimming.

2) Do not cut wet grass as it tends to stick to the trimmer head and guard, prevents proper discharge of grass clippings, and could cause you to slip and fall.
3) Regularly remove clippings and dirt around the trimmer head when trimmer is switched off and battery is removed .
4) Work methodically and stand firmly with your feet apart. Cut from right to left so the trimmings will be thrown away from the work area.
5) When cutting long grass, please make sure that you cut the area down in 2 to 3 stages.
6) Do not move the trimmer too fast as this will result in ineffective cutting and possible damage.
NOTE: If you find that the nylon line is too short, follow the instruction as in "AUTOMATIC LINE FEED SYSTEM' or "TO MANUALLY FEED THE LINE".

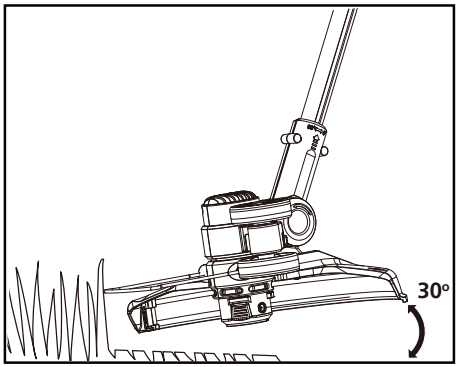

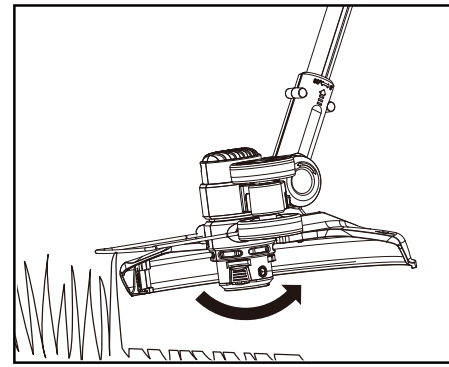

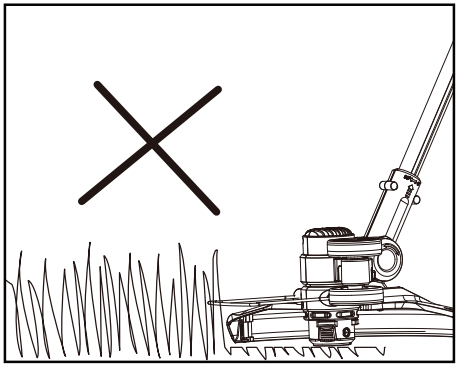

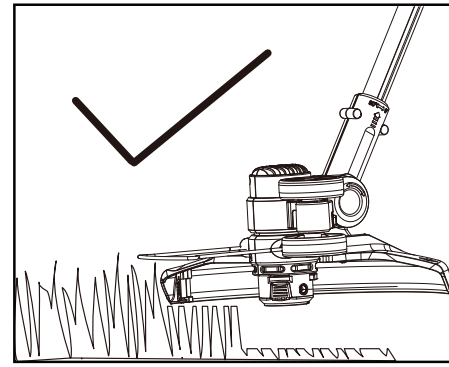

2. Edging
1) Change the tool from trimming to edging mode by adjusting the cutting angle to be in the lowest horizontal setting. Details refer to

"ADJUSTING THE CUTTING ANGLE".
2) Then pull the lower pole upward and rotate the main handle 90 degree clockwise.
NOTE: While edging, only allow the tip of the line to make contact with the area being worked. Do not force the line. The edging wheel helps to protect keep the unit from making contact across the ground. Take extra caution while edging as objects can be thrown from the trimmer line.

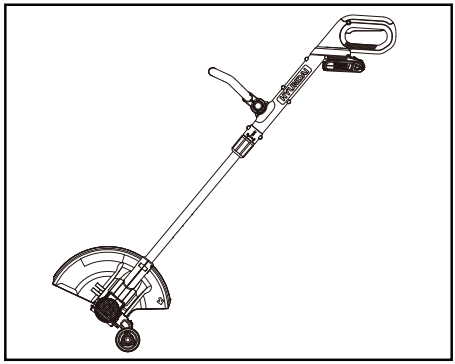

3. Automatic line feed system
When initially switching on the trimmer, a small length of line is fed out.
A 'clattering' noise will be heard when the lines hit the line cutter. DO NOT BE ALARMED, this is normal. After about 5 seconds the line will be cut to the correct length and the noise will reduce as the motor reaches full speed.
If the noise of the line being cut can't be heard, more line will be fed out. To feed more line, first allow the trimmer to stop completely, then restart, allowing the motor to reach full speed.
Repeat above steps, until you hear the lines hitting against the line cutter. (Do not repeat this procedure more than 6 times).

4. To manually feed the line

⚠WARNING: Before manually feeding the line, remove the battery pack first.

1. Press and release the line feed button **(P)**, while gently pulling out the lines **(d)** until the lines reach the line cutter **(M)**.
2. If too much line has been fed, it will extend past the line cutter. Remove the spool cap **(e)** (Details refer to "To remove the spool cap") and turn spool **(f)** anti-clockwise until the line is at the desired length.

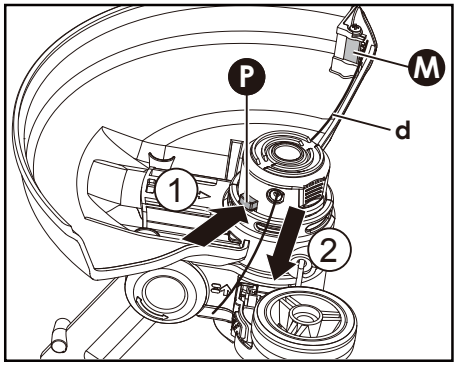

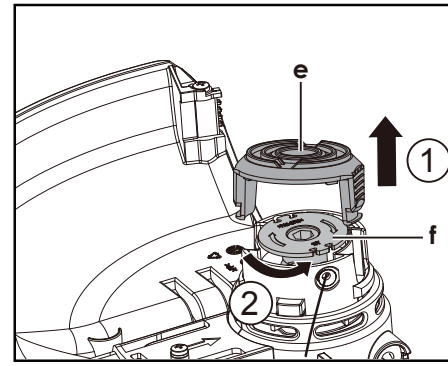

5. To remove the spool cap

1) Press and hold in the two cap release latches **(N)**.
2) Pull the cap **(e)** away from the spool holder.
3) Re-position the cap **(e)** by pressing firmly down towards the spool holder to ensure cap is fully secure.
4) Check that the cap is correctly fitted by trying to remove it without depressing the two latches **(N)**.

NOTE: When refitting the spool cap **(e)**, keep all areas of the cap and spool holder clean.

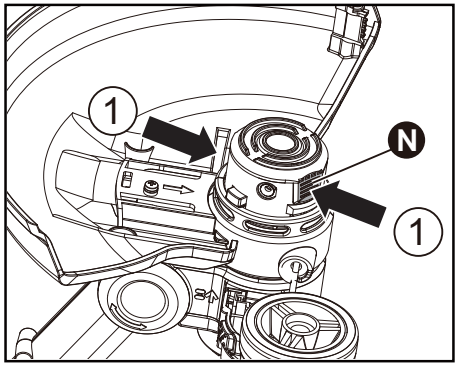

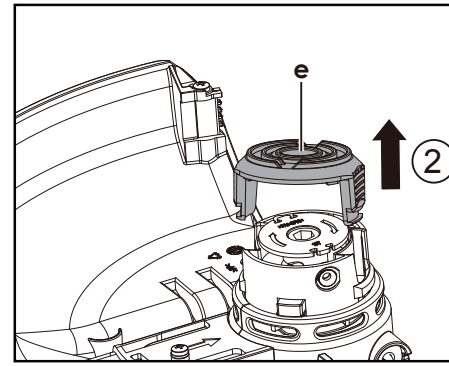

6. To replace the cut line

For your convenience it is recommended to buy the spool and the line as a complete set.

- Fitting spool and the line:

1) Remove the old spool.
2) Place a new spool into the cutting head. Feed one end of the line

through the eyelet, and repeat with the other end of the line.
3) Refit the cap.

- To fit the nylon line only:

⚠WARNING: Your Trimmer is designed to be ONLY used with a 1.65 mm diameter (0.065 in.) cutting line.

Always wind the line onto the upper section of the spool first. Take approximately 3m (120 in.) of the line. Insert 15mm (0.6 in.) of line into one of the holes **(g)** in the upper section of the spool **(e)** and wind the line in the direction of the arrows **(h)** on the top of the spool **(e)**.
Leave approximately 100mm of the line unwound.
Repeat on lower section of spool.
Care should be taken to ensure that the line is neatly coiled on the spool. Failure to do so will impair the efficiency of the automatic line feed.
Once complete, fit spool as described in "To fit a set of the spool and the line".

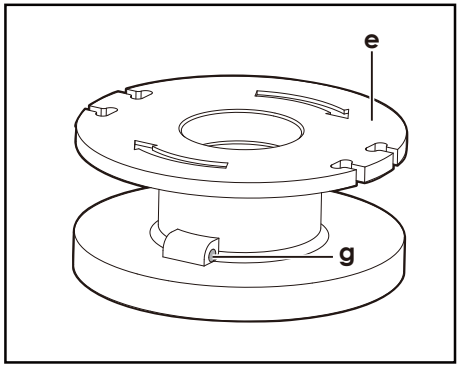

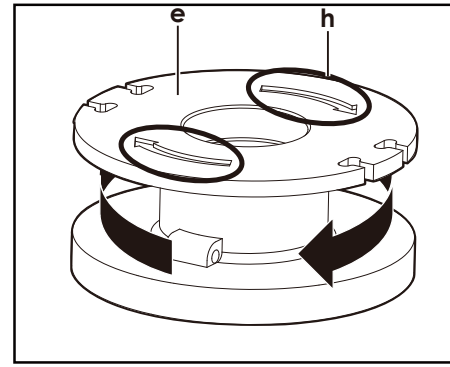

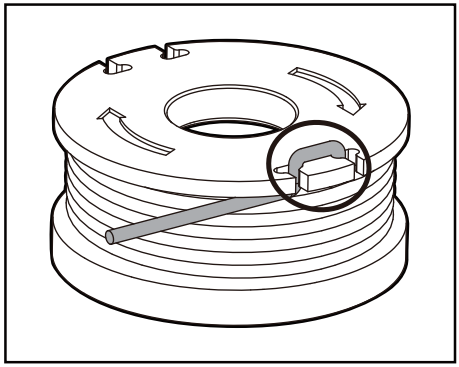

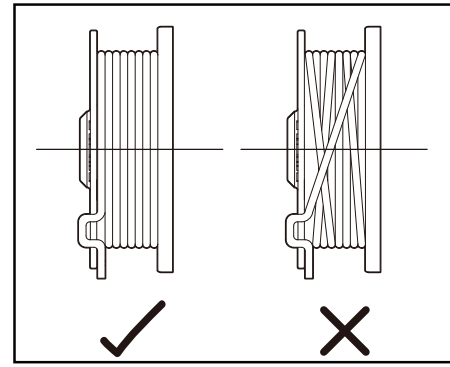

Maintenance & Care

Cleaning

Do not use cleaning agents or solvents. These may cause severe damage to the tool. Keep the ventilation slots, motor housing, and handles clean using a damp cloth or a brush.

Maintenance

Regular maintenance of your equipment extends the lifespan of the equipment. You will also achieve optimum cutting performance and avoid accidents.

For Battery Tools

The ambient temperature range for tool and battery use and storage is 32°F - 113°F (0°C-45°C).
The recommended ambient temperature range for the charging system during charging is 32°F - 104°F (0°C-40°C).

Storage & Transport

- Clean the equipment before putting it away.
- Store the device in a dry, frost-free, and dust-protected place, and out of reach of children.
- Store the battery only in a partially charged state. The state of charge should be 40 – 60 % over a longer storage period. (Two LED lights of the state of charge display light up green).
- During longer storage periods, check the state of charge of the battery and recharge if necessary (every 2 to 3 months).
- In order to keep the battery well charged, avoid exposing the device to extreme heat or cold in storage.
- Store the equipment between 50°F (10°C) and 77°F (25°C). During storage, avoid extreme cold or heat so the battery does not lose power.

Troubleshooting

⚠NOTE: All corrective actions should be carried out by suitably qualified person/s.

Problem	Possible cause	Fault correction
Trimmer fails to operate.	Battery discharged.	Recharge battery. Refer to "Battery charging".
	Battery too hot/cold.	Allow to cool/warm.
	Motor is broken.	Contact Customer Service.
	Internal wiring of machine damaged.	Contact Customer Service.
Trimmer runs intermittently.	Motor is broken.	Contact Customer Service.
	Battery not fully charged.	Recharge battery.
	On/off switch defective.	Contact Customer Service.
Excessive vibrations/noise.	Machine defective.	Contact Customer Service.
	Line spool is not wound well.	Rewind the line.
Cutting time per battery charge too short.	Battery has not been used for long period or only charged for short term.	Fully charge the battery. Refer to "Battery charging".
	Grass too high.	Cut in stages.
	Battery defective.	Replace the battery.
Machine does not cut.	Line broken.	Replace the line.
	Battery not fully charged.	Recharge battery. Refer to "Battery charging".
	Motor is broken (speed is too low).	Contact Customer Service.
	Grass entangled around cutting head.	Remove the grass.
Auto feed does not work	Cutting line is not wound well.	Manually feed the line, if still cannot feed out, remove the spool out and rewind the line.
	The line is tangled.	Replace with a new spool of line.
	Line is used up.	Replace with a new spool of line.

Technical Data

Specification

Rated voltage:	20 V ⎓ Max.
No load speed:	9000 /min
Max. cutting diameter:	30cm (12 in.)
Diameter of line:	1.65mm (0.065 in.)
Line length:	1x3m (120 in.)
Battery capacity (BI20-2):	2.0 Ah
Charger input (C20-2):	100-240V~50/60Hz, 55W
Charger output (C20-2):	20V ⎓ 2.0A
Charging time:	1 Hour
Charger protection class:	⧈ /II
Machine weight (with battery):	2.24 kg
A weighted sound pressure L_{pA}: (K_{pA}= 3 dB(A))	76,6 dB(A)
A weighted sound pressure L_{wA}: (K_{wA}= 0,91 dB(A))	89,19 dB(A)
Typical weighted vibration: (uncertainty K= 1,5 m/s^2)	2,35 m/s^2

Recycling & Disposal

Recycling & Disposal

We do not offer a takeback scheme for the recovery of Waste Electrical Electronic Equipment (WEEE) & Batteries. Instead the responsibility to dispose of WEEE and/or Batteries is passed onto you by us.
So when it becomes necessary to dispose of your machine you must take it to your local Civic Amenity Site. For further information please contact your local Authority for disposal advice.

You MUST make sure that all unused oil and fuel is disposed of correctly either beforehand or at your local Civic Amenity Site.

• Under NO circumstances must any fuel or oil be put down any drains.
• Certain products contain WEEE waste which should not be disposed of in your domestic waste.
• You MUST recycle WEEE in accordance with your local authority or recycling centre.
• Certain products contain batteries which should not be disposed of in your domestic waste.
• You MUST recycle batteries in accordance with your local authority or recycling centre.
• Unwanted packaging and materials should be stored and taken to a recycling centre so it can be disposed of in a manner which is compatible with the environment.

We are a Member of the VALPAK National Compliance Scheme and our registration number is RM08660. For further information about disposal please contact your Local Authority.
You can also get more advice and guidance about recycling at the following website http://www.recycle-more.co.uk
Should you pass this product on to another user either sold or loaned, you MUST pass on this user manual. This will make sure that all other users can use and maintain this machine safely.

Recycling & Disposal

Environmental Protection

1. Environmental protection should be a priority of considerable importance when using the machine, for the benefit of both social coexistence and the environment in which we live. Try not to cause any disturbance to the surrounding area.
2. You must comply with local regulations and provisions for the disposal of packaging, oils, fuel, filters, damaged parts or any elements which have a strong impact on the environment. This waste must not be disposed of as normal waste. It needs to be separated and taken to specified waste disposal centres where the material will be recycled.
3. You must comply with local regulations for the disposal of waste materials after mowing.
4. When disposing, do not pollute the environment with the machine, but hand it over to a disposal centre, in accordance with the local laws in force.

EU Declaration Of Conformity

Importer and Authorised Representative

Genpower Ltd
Isaac Way, Pembroke Dock, SA72 4RW

Country of Origin: China
Description: 20V Grass trimmer
SKU Code: HY20CGT
Date of Issue: 20/12/2024

Regulations and Directives of Compliance

2006/42/EC, 2014/30/EU, 2011/65/EU&(EU)2015/863, 2000/14/EC amended by 2005/88/EC, (EU)2023/1542, 2014/35/EU

The notified body involved

Name: **TÜV Rheinland LGA Products GmbH**
Address: **Tillystraße 2 D - 90431 Nürnberg**

2000/14/EC amended by 2005/88/EC:

- Conformity Assessment Procedure as per	**Annex VI**
- Measured Sound Power Level	**89,19 dB(A)**
- Declared Guaranteed Sound Power Level	**91 dB(A)**

Statement of Declaration

We the importer and authorised representative of the product described confirm conformity within the provisions of applicable regulations and directives listed within this document.

Standards conform to

EN 62841-1, FprEN IEC 62841-4-4:2020+FprAA:2021-02, EN ISO 3744, EN IEC 55014-1, EN IEC 55014-2, EN IEC 63000, EN 60335-1, EN 60335-2-29, EN 62233, EN IEC 61000-3-2, EN 61000-3-3

Signed on Behalf of Genpower Ltd

Place of Issue: Genpower Ltd

Signatory Name: Roland Llewellin

Position: Managing Director

R J Llewellin

.....

CE

Notes

Useful Information

Check Out Our YouTube Channel

Our videos on YouTube include:
Unboxing
Assembly of your machine
How to service your machine
Products in use
'How To' videos
Product features

Go to YouTube and search 'Hyundai Power Products'.

Warranty

Proof of purchase will be required before you make a warranty claim. Full warranty terms and conditions can be found on the HYUNDAI POWER PRODUCTS website:
www.hyundaipowerproducts.co.uk

Manual Updates

Our manuals are constantly being reviewed and updated. Should you find an error, omission or something unclear, please contact us for assistance. We reserve the right to make any modifications without prior notice whenever necessary.
Our latest manuals are also placed online. All our manuals can be downloaded at: www.hyundaipowerproducts.co.uk

Returning Your Product

If you are returning your product, please contact the dealer for their returns policy.

Leaving A Review

We work very hard to give all of our customers the best possible service. If you have any problems, before leaving negative feedback, please contact us to give us a chance to resolve the issue. We would be delighted if you left us positive feedback! To leave a review, please go to: uk.trustpilot.com/review/hyundaipowerequipment.co.uk

Ordering Spare Parts

You can find the spare part you are looking for at power-spares.co.uk

Product Record

Information

As soon as you have purchased the machine, we recommend that you fill out the following. If you need to contact an authorised dealer or customer service for information on servicing, you may need to provide the following information.

Date Of Purchase:……...

Dealer Name:……

Dealer Phone:……

Model Number:……

Serial / Batch Number:……

Contact Us

Need Help? Talk To Our Experts

Our friendly aftersales team will be more than happy to help you.

Phone
Call our team on 01646 687 880

Email
aftersales@genpower.co.uk

Online Live Chat
Go to www.hyundaipowerproducts.co.uk

Post
Genpower Ltd, Isaac Way, Pembroke Dock, Pembrokeshire, SA72 4RW.

Hyundai Support Website
Go to hyundaisupport.co.uk

HYUNDAI
POWER PRODUCTS

GENUINE PRODUCT OF
HYUNDAI CORPORATION

For Inquiries, Please Contact:
GENPOWER LTD
Isaac Way, London Road,
Pembroke Dock, UK, SA72 4RW.
T: +44 (0) 1646 687 880
E: info@hyundaipowerproducts.co.uk
www.hyundaipowerproducts.co.uk

Imported / Distributed by Genpower Ltd
for the United Kingdom & Ireland

Licensed by Hyundai Corporation
Holdings, Korea