SERVICE DATA

TRIMMER/BRUSHCUTTER

ECHO: RM-520ES

shindaiwa: BP510S

(Serial number : 37000001 and after)
(Serial number : 38000001 and after)

INTRODUCTION

We are constantly working on technical improvement of our products. For this reason, technical data, equipment and design are subject to change without notice. All specifications and directions in this SERVICE DATA are based on the latest product information available at the time of publication.

CONTENTS

page
1 SERVICE INFORMATION 2
1-1 Specifications 2
1-2 Technical data 3
1-3 Torque limits 4
1-4 Special repairing materials 4
1-5 Service limits 5
1-6 Special tools 6

2 SERVICE HINT 7
2-1 Removing gear case assembly from clutch case 8
2-2 Replacing gears and ball bearings 9

Reference No. **11-50A-04**
REVISED: 202007
ISSUED: 201601

Copyright(C)2018 YAMABIKO Corporation All rights reserved.

1 SERVICE INFORMATION

1-1 Specifications

Dimensions*1	Length	mm (in)	2824 (111.2)
	Width	mm (in)	449 (17.7)
	Height	mm (in)	564 (22.2)
Dry weight*2		kg (lb)	11.9 (26.2)
Engine	Type		YAMABIKO, air-cooled, two-stroke, single cylinder
	Rotation		Counterclockwise as viewed from the output end
	Displacement	cm^3 (in^3)	50.2 (3.06)
	Bore	mm (in)	44.0 (1.73)
	Stroke	mm (in)	33.0 (1.30)
	Compression ratio		7.1
Carburetor	Type		Diaphragm, horizontal-draft
	Model		WALBRO WT-1096
	Venturi size - Throttle bore	mm (in)	13.5 - 15.85 (0.53 - 0.62)
Ignition	Type		CDI (Capacitor discharge ignition) system, Digital magneto
	Spark plug		NGK BPMR8Y
Exhaust	Muffler type		Spark arrester muffler
Starter	Type		ES-start (effortless) / S Start (Soft)
	Rope diameter x length	mm (in)	3.8 x 800 (0.15 x 31.5)
Fuel*3	Type*4		Mixed two-stroke fuel
	Mixture ratio		50 : 1 (2%)
	Gasoline		Minimum 89 octane
	Two-stroke engine oil		ISO-L-EGD (ISO/CD13738), JASO FC/FD
	Tank capacity	L (U.S.fl.oz.)	Full tank capacity: 1.07 (36.2) Usable capacity: 1.06 (35.8)
Clutch	Type		Centrifugal, 2-shoe pivot
Handle	Type		Front : Crescent loop with cushion grip Rear : Integrated control grip with cushion
Angle transmission	Reduction ratio		1
	Gear tooth		Spiral bevel gear
	Lubrication		Urea based grease
Drive shaft	Type		Solid type with serration (10-tooth)
	Diameter - Length	mm (in)	8.0 - 1140 (0.31 - 44.88)
	Housing OD - ID	mm (in)	25.0 - 22.6 (0.98 - 0.89)
	Length	mm (in)	330 (12.99)
Gear case	Reduction ratio		1.33
	Gear tooth		Spiral bevel gear
	Lubrication		Lithium based grease
Cutter	Type		Nylon line cutter Z5
	Arbor diameter for blade	mm (in)	25.4 (1.0)
	Fastener type, size	mm	Left-hand thread nut, M10 x 1.25 pitch
	Cutting rotation		Counterclockwise as viewed from top

OD: Outer diameter. ID: Inner diameter.

*1 Without cutting attachment *2 Without cutting attachment and Shield *3 Refer to Operator's manual

*4 Premixed alkylate fuel for 2-stroke can be used

1-2 Technical data

Engine			
Compression pressure		MPa (kgf/cm^2) (psi)	1.0 (10.2) (145)
Clutch engagement speed		r/min	3,650
Ignition system			
Spark plug gap		mm(in)	0.6 - 0.7 (0.024 - 0.028)
Spark test	Tester gap w/ spark plug	mm(in)	4.0 (0.16)
	Tester gap w/o spark plug	mm(in)	6.0 (0.24)
Secondary coil resistance		Ω	980 - 1,020
Pole shoe air gaps		mm (in)	0.3 - 0.4 (0.012 - 0.016)
Ignition timing	at 3,000 r/min	°BTDC	14
	at 8,000 r/min	°BTDC	27
	at 10,000 r/min	°BTDC	29
Carburetor			
Test Pressure, minimum		MPa (kgf/cm^2) (psi)	0.05 (0.5) (7.0)
Metering lever height		mm(in)	1.65 (0.06) lower than diaphragm seat
Tool to adjust mixture needles			D-shaped (L) P/N X645-000031 (Carb. adjustment tool P/N Y089-000094)
Carburetor adjustment			
Cutting head preparation	Nylon line cutter		Z5
	Line length*1		220 mm
1) Initial setting	H mixture needle	turn out	2 7/8
	L mixture needle	turn out	1 7/8
	Throttle adjust screw	turn in*2	2 1/4
Engine warm-up	Idle - WOT : Total	sec.	10 - 50 : 180
2) Find idle maximum speed			Adjust L mixture needle to maximum idle speed*3
3) Set idle maximum speed w/ TAS		r/min	3,600
4) Set idle speed by turning L mixture needle CCW		r/min	2,800
5) Find WOT maximum speed		r/min	Adjust H mixture needle to maximum WOT speed
6) WOT setting		r/min	Turn H mixture needle CCW to decrease WOT speed by : 120
7) Verify final engine speed with standard equipment		r/min	Idle: 2,400 - 3,300 WOT: 10,400 - 11,400
8) Verify clutch engagement speed			Confirm clutch engagement speed. If it is less than 1.25 times the idle speed, adjust the idle speed by turning TAS CCW.

BTDC: Before top dead center. **WOT:** Wide open throttle **CCW:** Counterclockwise **TAS:** Throttle adjust screw

*1 From eyelet on nylon head

*2 Set Throttle adjust screw to the point that its tip just contacts throttle plate before initial setting.

*3 If clutch engages during adjustment process 2), decrease engine speed by turning TAS CCW until clutch disengages and then redo 2).

1-3 Torque limits

Descriptions		Size	N•m	kgf•cm	in•lbf
Starter system	Starter pawl	M 5	6 - 9	60 - 90	50 - 80
	Starter case	M 5	3 - 4.5	30 - 45	26 - 40
Ignition system	Magneto rotor (Flywheel)	M 8	20 - 24	200 - 240	175 - 210
	Ignition coil	M 5	5 - 7	50 - 70	45 - 60
	Spark plug	M 14	13 - 17	130 - 170	115 - 150
	Fan cover	M 5*	3 - 4.5	30 - 45	26 - 40
Fuel system	Carburetor	M 5	4 - 5.5	40 - 55	35 - 50
	Intake bellows	M 5*	3 - 5	30 - 50	26 - 45
	Intake insulator	M 5*	6 - 8	60 - 80	53 - 70
	Insulator plate	M 5*	3 - 4.5	30 - 45	26 - 40
	Fuel tank bracket	M 5	5 - 7	50 - 70	45 - 60
	Fuel tank	M 5	5 - 7	50 - 70	45 - 60
Clutch	Clutch shoe	M 8	20 - 23	200 - 230	175 - 200
	Clutch hub	M10	20 - 23	200 - 230	175 - 200
Engine	Crankcase	M 5**	7 - 11	70 - 110	60 - 95
	Cylinder	M 5**	7 - 11	70 - 110	60 - 95
	Cylinder cover	M 5*	2 - 3	20 - 30	17 - 26
	Stand	M 5*	3 - 4.5	30 - 45	26 - 40
	Muffler	M 6	10 - 14	100 - 140	90 - 125
	Muffler cover	M 5*	3 - 4.5	30 - 45	26 - 40
	Muffler stay	M 5	6 - 9	60 - 90	50 - 80
Others	Blade fastening nut	LM 10	28 - 32	280 - 320	245 - 280
Regular bolt, nut and screw		M 3	0.6 - 1	6 - 10	5 - 9
		M 4	1.5 - 2.5	15 - 25	13 - 22
		M 5	3 - 4.5	30 - 45	26 - 40
		M 6	4.5 - 7.5	45 - 75	40 - 65
		M 8	11 - 15	110 - 150	95 - 130
		M 10	21 - 30	210 - 300	180 - 260

LM: Left hand thread

* Apply thread locking sealant. (See below)

** The torque differences among four bolts should not exceed 20 kgf•cm (2N•m, 17in•lbf) on one cylinder or crankcase.

1-4 Special repairing materials

Material	Location	Remarks
Grease	Flexible shaft*	PYRONOC (Urea based grease) P/N: X695-000070
	Angle transmission	
	Gear case	EPNOC AP2 (Lithium based grease) P/N X695-000060
	Rewind spring	
	Starter center post	
	Drive shaft	
Oil	Oil seal inner lips	Two-stroke engine oil or engine oil (SAE#30)
Thread locking sealant	Muffler cover	Loctite #242, ThreeBond #1324 or equivalent

* Evenly grease all the surface of the flexible shaft approximately 10 mL in every 18 hours.

1-5 Service limits

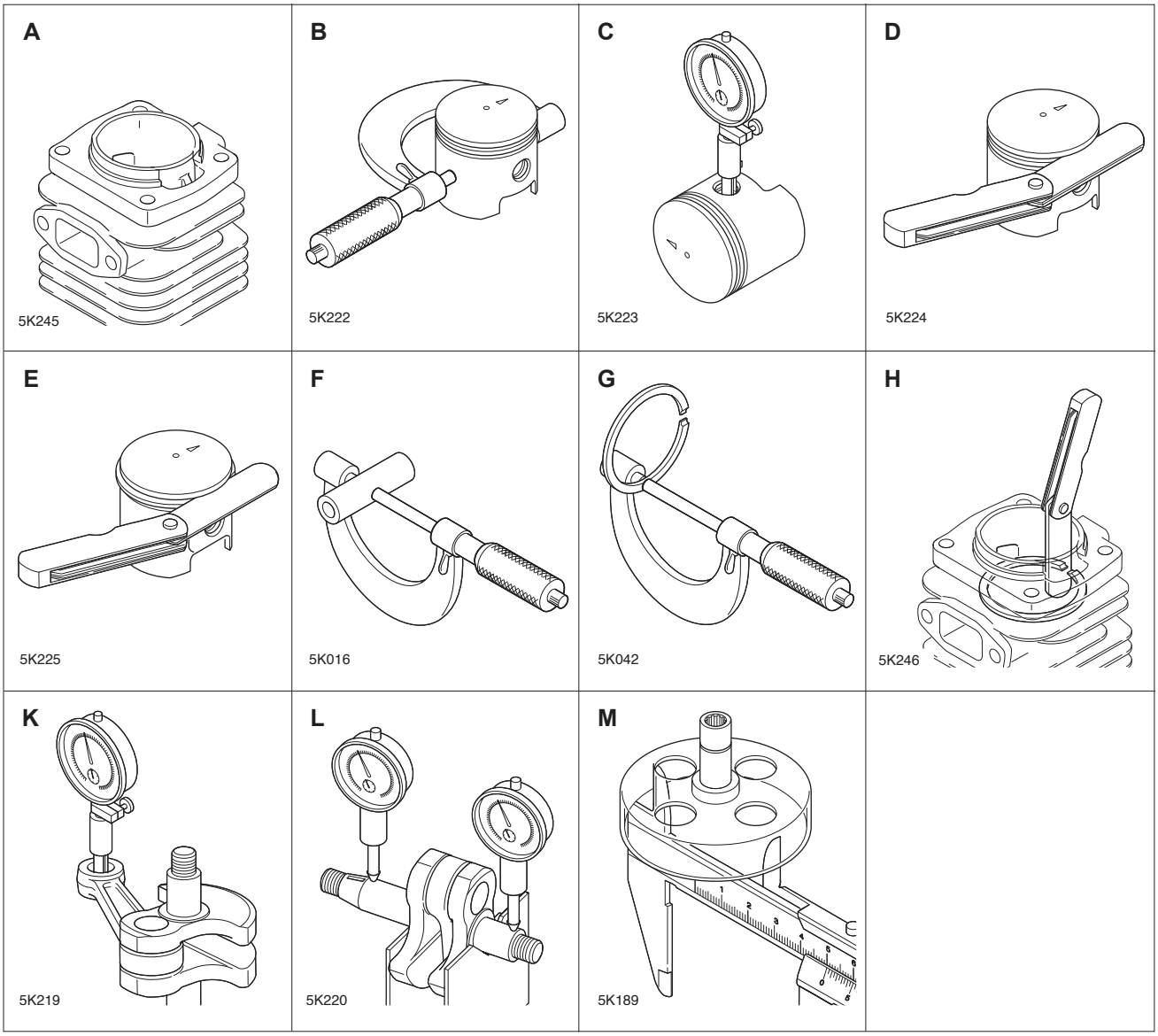

Description			mm (in)
A	Cylinder bore		When plating is worn and aluminium can be seen
B	Piston outer diameter	Min.	43. 92 (1.571)
C	Piston pin bore	Max.	11. 035 (0.4344)
D	Piston ring groove	Max.	1. 6 (0.063)
E	Piston ring side clearance	Max.	0. 1 (0.004)
F	Piston pin outer diameter	Min.	10. 98 (0.4323)
G	Piston ring width	Min.	1. 45 (0.057)
H	Piston ring end gap	Max.	0. 5 (0.02)
K	Con-rod small end bore	Max.	15. 025 (0.5915)
L	Crankshaft runout	Max.	0. 02 (0.001)
M	Clutch drum bore	Max.	79. 5 (3.13)

1-6 Special tools

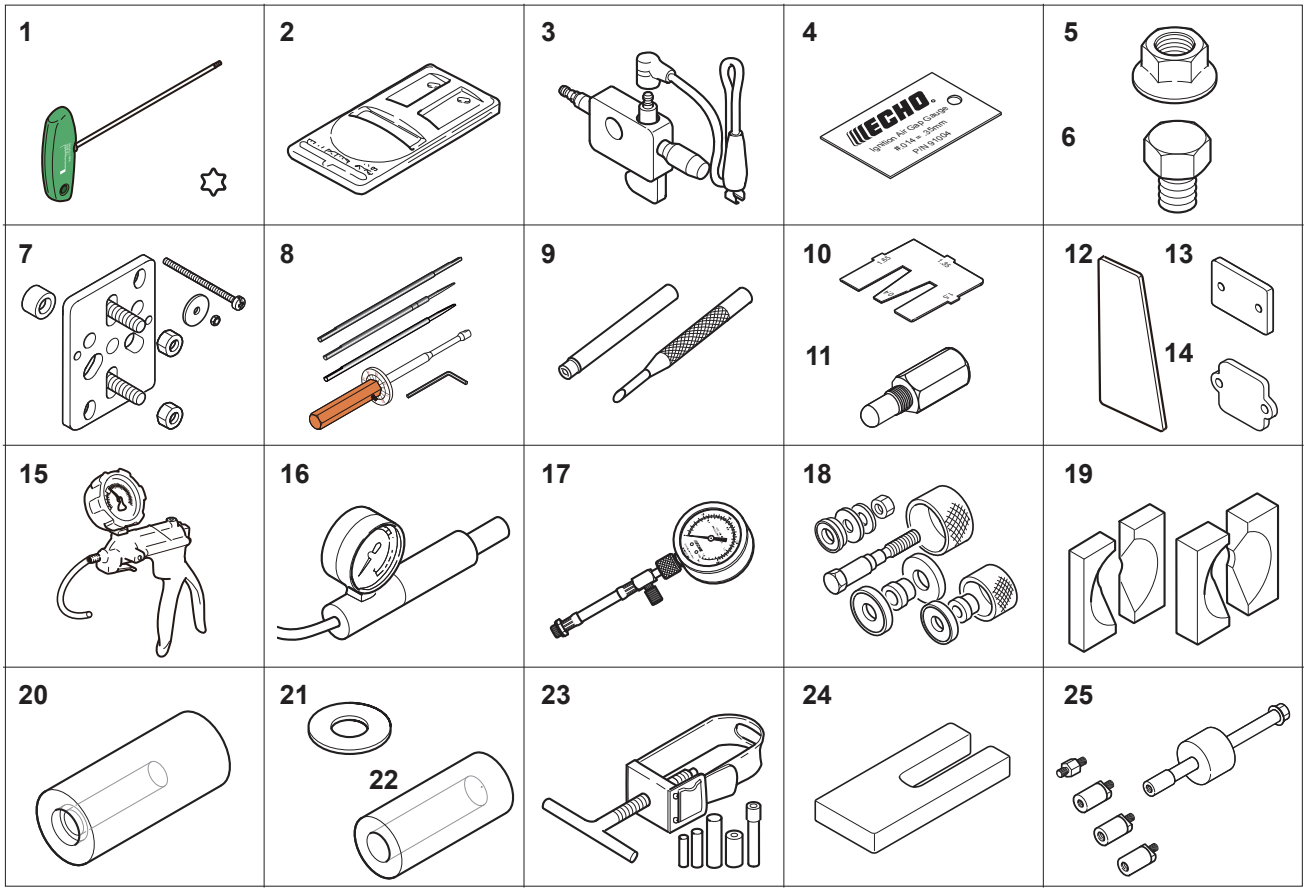

Key	Part Number	Description	Reference
1	X602-000340	Torx wrench (T27)	Removing and installing torx bolt
2	897802-33330	Tachometer PET-1000R	Measuring engine speed to adjust carburetor
3	897800-79931	Spark tester	Checking ignition system
4	91004	Module air gap gauge	Adjusting pole shoe air gaps
5	V265-000200	Flange nut	Removing crankshaft from crankcase (clutch side)
6	900100-08008	Bolt	Removing crankshaft from crankcase (clutch side)
7	Y089-000111	Puller	Removing magneto rotor
8	Y089-000094	Carburetor adjustment tool	Adjusting carburetor
9	500-500	Welch plug tool (Walbro)	Removing and installing welch plug
10	897563-19830	Metering lever gauge	Measuring metering lever height on carburetor
11	X644-000020	Piston stopper	Locking crankshaft rotation
12	91041	Pressure rubber plug	Plugging exhaust port to test crankcase / cylinder leakages
13	897826-16131	Pressure rubber plug	Plugging intake port to test crankcase / cylinder leakages
14	897827-16131	Pressure plate	Plugging intake port to test crankcase / cylinder leakages
15	91149	Pressure / vacuum tester	Testing crankcase and cylinder leakages
16	897803-30133	Pressure tester	Testing carburetor and crankcase leakages
17	91037	Compression gauge	Measuring cylinder compression
18	897701-14732	Bearing tool	Removing and installing ball bearings on crankcase
19	897701-02830	Bearing wedge	Removing ball bearings on crankshaft
20	897714-24330	Oil seal tool	Installing ball bearings of gear case
21	363018-00310	Washer	Installing crankcase oil seal
22	897726-16431	Oil seal tool	Installing crankcase oil seal
23	897702-30131	Piston pin tool	Removing and installing piston pin
24	897719-02830	Piston holder	Making piston steady to remove and install piston/ring
25	P021-044871	PTO shaft puller	Removing driven shaft

2 SERVICE HINT FOR CLUTCH SIDE GEAR CASE

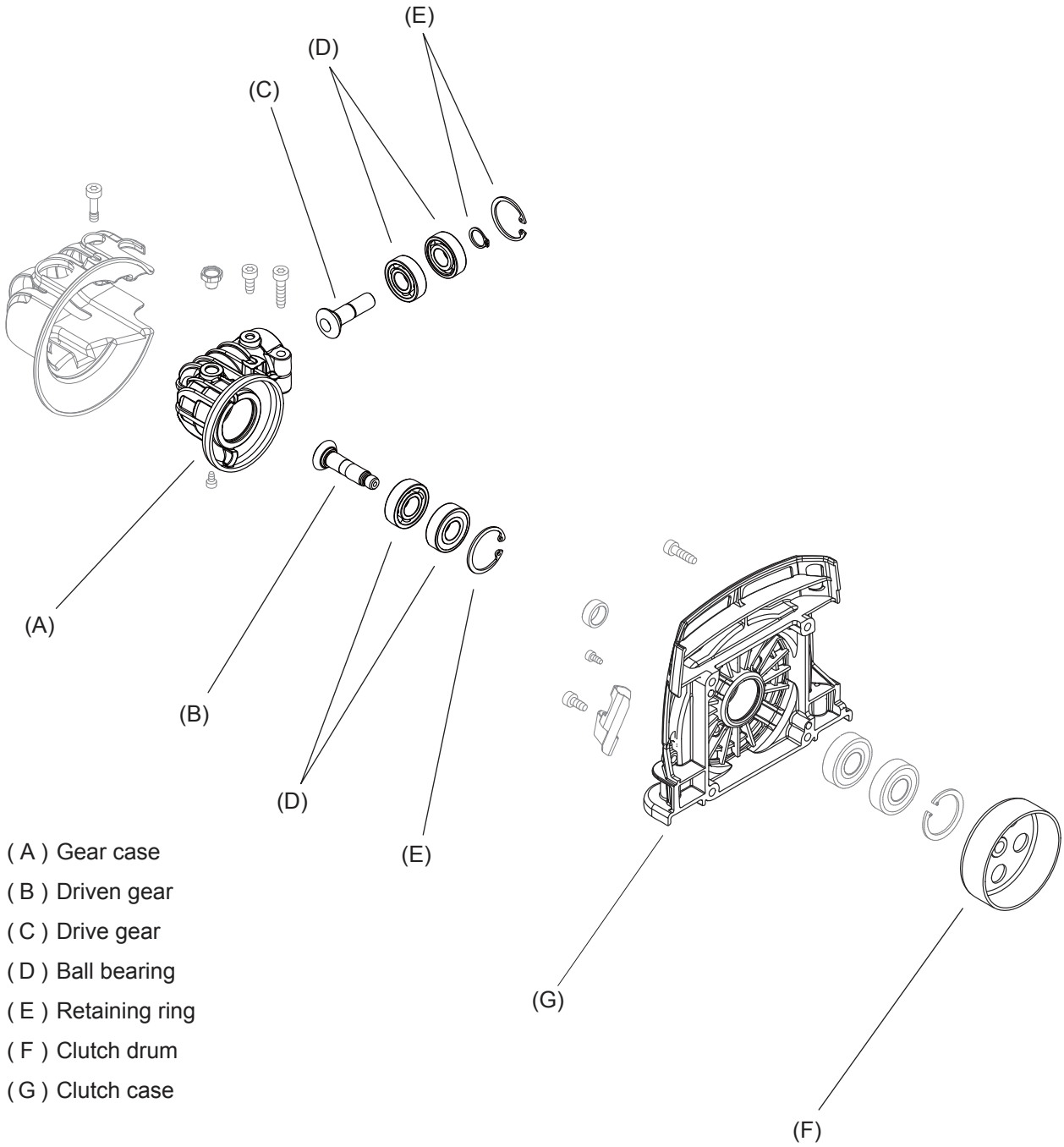

(A) Gear case
(B) Driven gear
(C) Drive gear
(D) Ball bearing
(E) Retaining ring
(F) Clutch drum
(G) Clutch case

2-1 Removing gear case assembly from clutch case

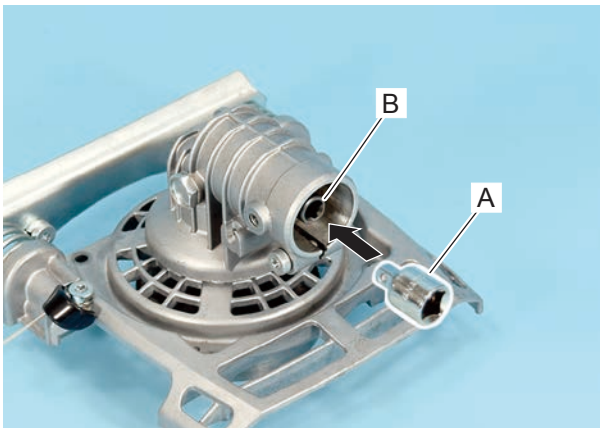

1. Insert socket wrench adapter (A) (6.3mm Drive) into drive gear (B) to hold driven gear rotaion.

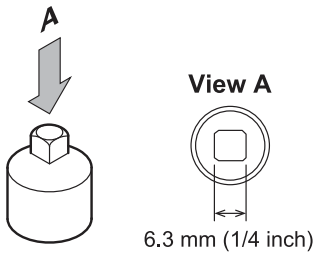

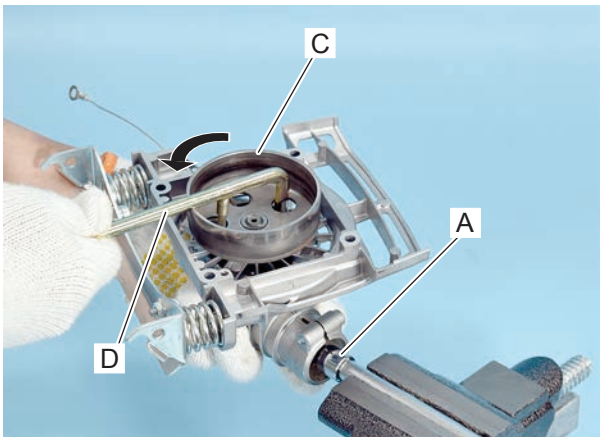

2. Remove clutch drum (C) using 2-pin wrench 897712-07930 (D), inserting the adapter (A) into the drive gear as shown.

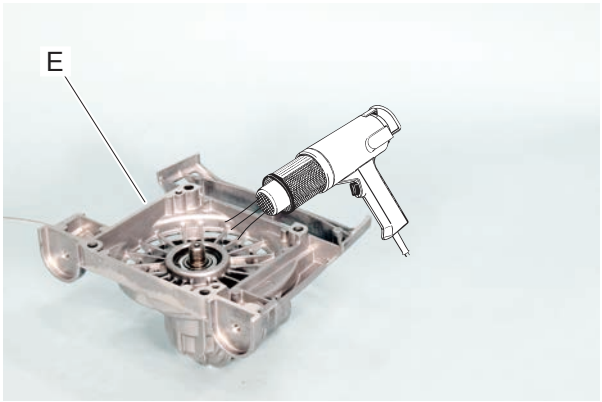

3. Heat up around driven gear of clutch case (E) with a heat gun as shown.

WARNING ⚠ DANGER

When using a heat gun, wear safety gloves. Otherwise, a burn will result.

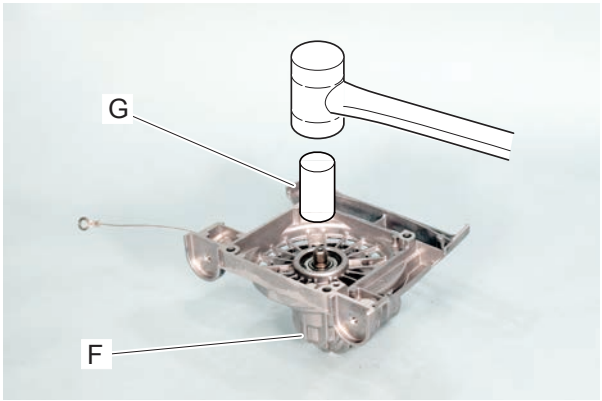

4. Remove gear case assembly (F), tapping driven gear with a plastic hammer as shown.

NOTE: Use a iron block or equivalent (G) to avoid driven gear damage when tapping the gear.

2-2 Replacing gears and ball bearings

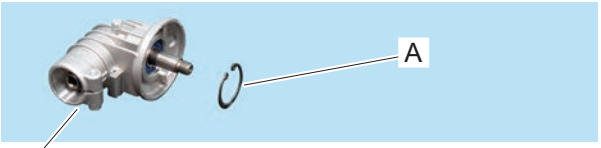

1. Remove retaining ring (A) from gear case (B).

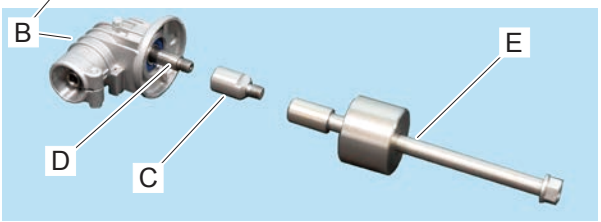

2. Screw connector (Female M10 x 1.25) (C) on driven gear (D). Screw PTO shaft puller (E) on the connector.

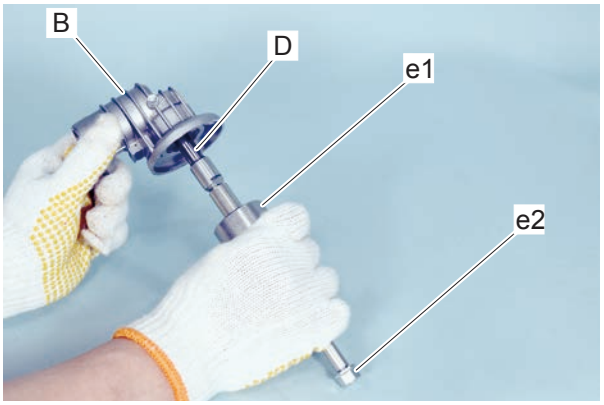

3. Strike weight (e1) to nut (e2) holding gear case (B) to pull out driven gear (D) together with the relative parts.

NOTE: Keep hold weight (e1) while using. The puller (E) and driven gear (D) could fly out, and may be damaged.

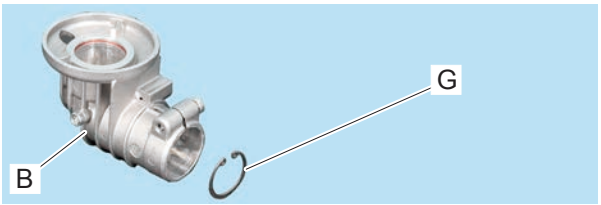

4. Remove retaining ring (G) from gear case (B).

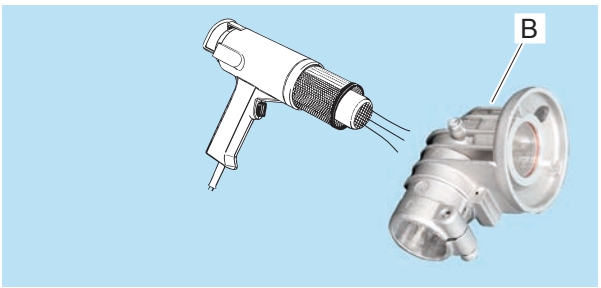

5. Heat up the middle of gear case (B) with a heat gun as shown.

WARNING ⚠ DANGER

When using a heat gun, wear safety gloves. Otherwise, a burn will result.

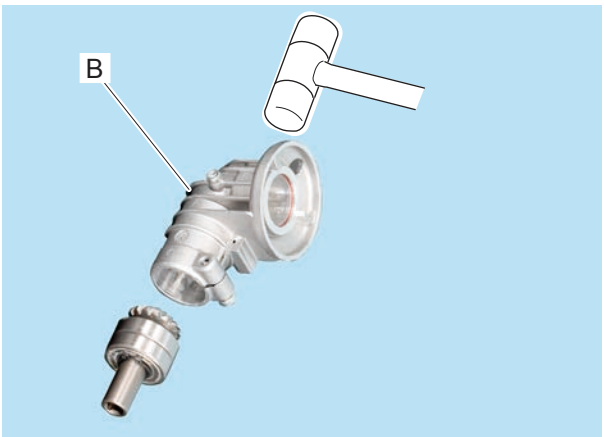

6. Tap gear case (B) several times using a plastic hammer until drive gear with two ball bearings come out as shown.

7. Check drive gear, driven gear, and ball bearings. If worn or rough rotation is found, replace the parts as required.

2-2 Replacing gears and ball bearings (continued)

8. Apply small amount of urea based grease on rolling element (Ball) of ball bearings (h2) and (k2).

9. Apply small amount of urea based grease on gears of driven gear (D) and drive gear (L) as shown.

NOTE: If old grease on ball bearings or gears is left, remove it.

10. Install ball bearings (h1) and (h2) on driven gear (D) using oil seal tool 897726-21430 (J) one by one.

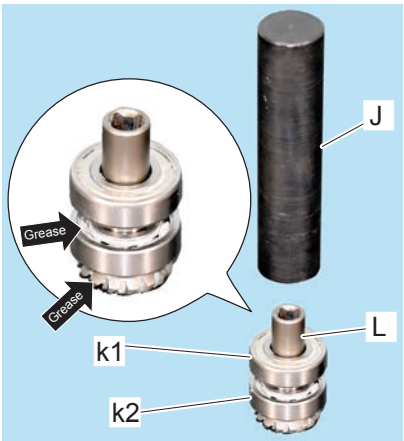

11. Install ball bearings (k1) and (k2) on drive gear (L) using oil seal tool 897726-21430 (J) one by one. Install retaining ring (M) as shown.

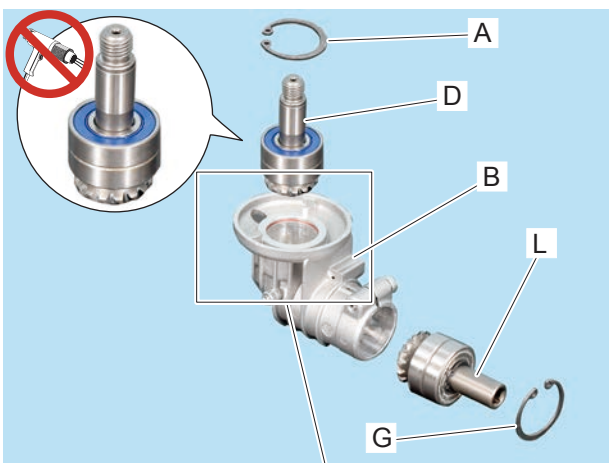

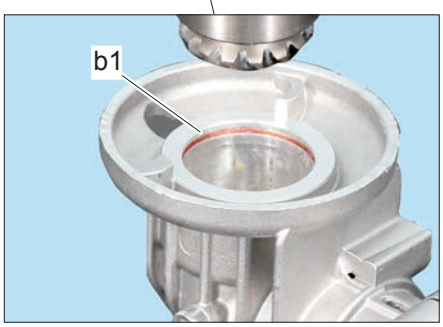

12. Heat up gear case (B) with a heat gun.

13. Install drive gear (L) into gear case (B) using oil seal tool 897726-21430 (J).

14. Install driven gear (D) into gear case (B) using oil seal tool 897726-21430 (J).

15. Make sure the gears can move smoothly. If it does not, remove the gears and go back step 12.

NOTE: Do not heat up gear case (B) with driven gear (D) inserted in gear case (B).

16. Apply small amount of thread locking sealant (Loctite #242, ThreeBond #1324 or equivalent) on grooves (b1) of gear case (B) for retaining ring (G) and (A).

NOTE: Do not apply thread locking sealant on ball bearings. If old thread locking sealant is left in grooves, remove it.

17. Install retaining rings (G) and (A).

2-2 Replacing gears and ball bearings (continued)

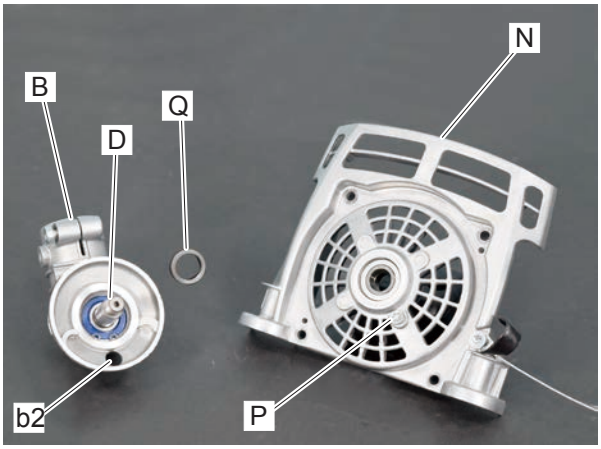

18. Install coller (Q) on driven gear (D).

19. Assemble gear case assembly (B) to clutch case (N), matching hole (b2) with screw (P).